USER GUIDE · INKO® MODULE TUBING CLAMP

INTENDED USE

INKO® is a tubing clamp designed for fast assembly to fit cable tray lateral slots. (Adapter brackets are available for longitudinal slots). All clamp bodies are available with bases for bolting or welding.

INSTRUCTION FOR USE

For Module base units from 6 to 20 mm tubing:
Position the first Half Part of the tube clamp into the module base before placing the tube. Add the second half part and a Pressure Plate before fixing with the Lock Plate. Typical torque is 5-6 Nm.

For Module base units from 21 to 42 mm tubing:
Place a Base Plate (shown in red) and then the first Half Part of the tube clamp into the module base before placing the tube. Add the second Half Part and a Top Pressure Plate before fixing with the Lock Plate. Typical torque is 5-6 Nm.

6 to 20 mm tubing

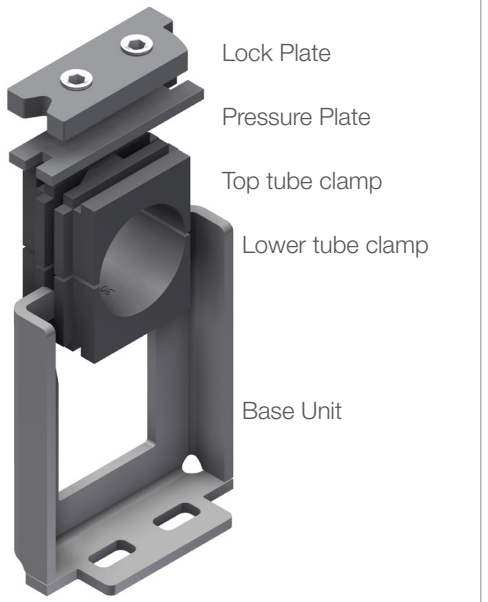

21 to 42 mm tubing

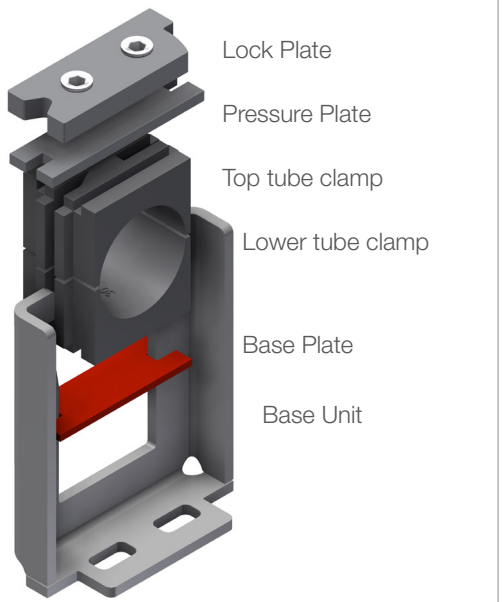

INKO® module clamps are available as standard in widths for 1 - 6 tubes and 1 or 2 high.

INKO® module clamps can also be stacked with one extra layer, invaluable for modifications.

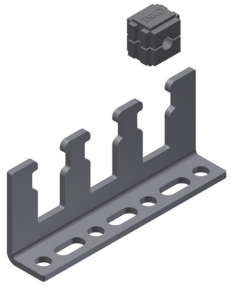

Fit the lower adapter.

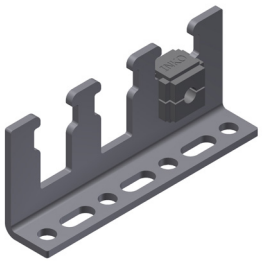

Fit the lower tube in the adapter.

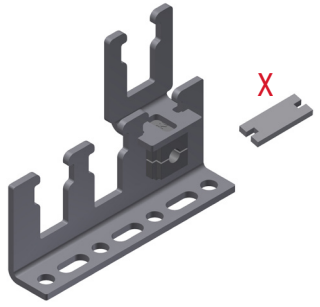

Fit the bracket for the extra top tube. Omit the pressure plate over the bottom clamp.

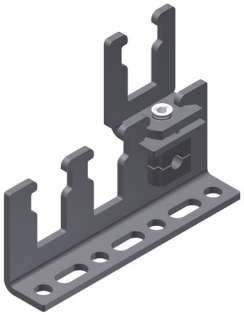

Fit the lock plate and top tube.